Published: 11-May-2011

Automatic Transmission / Transaxle External Controls - TDV6 2.7L Diesel -

Item	Specification
Type	Cable operated from shift mechanism to bellcrank on side of gearbox with manual release from Park 'P' position in the event of electrical failure

Torque Specifications

Description	Nm	lb-ft
Selector lever locknut	14	10
Transmission heat shield bolts	10	7
Transmission undershield bolts	10	7
Transmission selector nuts	8*	6

*Before VIN257100, discard old fixings and tighten new fixings to the torque value given.

transmissionmanuals.com

Published: 11-May-2011

Automatic Transmission / Transaxle External Controls - TDV6 2.7L Diesel - External Controls

Diagnosis and Testing

Principles of Operation

For a detailed description of the automatic transmission/transaxle external controls system and operation, refer to the relevant Description and Operation section of the workshop manual.

Inspection and Verification

CAUTION: Diagnosis by substitution from a donor vehicle is **NOT** acceptable. Substitution of control modules does not guarantee confirmation of a fault, and may also cause additional faults in the vehicle being tested and/or the donor vehicle.

• NOTE: Check and rectify basic faults before beginning diagnostic routines involving pinpoint tests.

1. **1.** Verify the customer concern.
2. **2.** Visually inspect for obvious signs of mechanical or electrical damage.

Visual Inspection

Mechanical	Electrical
• Check for correct gear selector lever cable adjustment. REFER to: Selector Lever Cable Adjustment (307-05A Automatic Transmission/Transaxle External Controls - TDV6 2.7L Diesel, General Procedures). • Visibly worn or damaged components • Loose or missing fastners	• Fuses • Loose or corroded electrical connectors

3. **3.** If an obvious cause for an observed or reported concern is found, correct the cause (if possible) before proceeding to the next step.
4. **4.** If the cause is not visually evident, check for Diagnostic Trouble Codes (DTCs) and refer to the DTC Index.

DTC Index

For a list of Diagnostic Trouble Codes (DTCs) that could be logged on this vehicle, please refer to Section 100-00.

transmissionmanuals.com

Published: 11-May-2011

Automatic Transmission / Transaxle External Controls - TDV6 2.7L Diesel - Selector Lever Cable Adjustment

General Procedures

1. WARNING: The hand brake and foot brake MUST BE applied.

Check for correct cable adjustment.

- Move the selector lever from 'P' position, check engagement in each position and return to 'P'.
- Check that the engine will start in 'P' and 'N' positions and that the engine start is inhibited when drive positions are selected.

2. WARNING: Do not work on or under a vehicle supported only by a jack. Always support the vehicle on safety stands.

Raise and support the vehicle.

3. Remove the transmission undershield.

- Remove the 6 bolts.

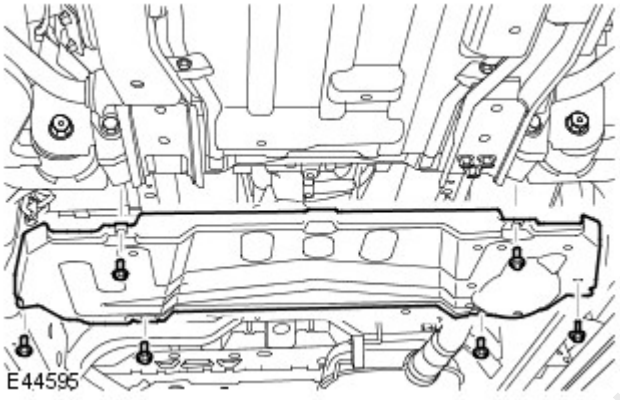

4. If installed, remove the transmission heat shield.

- Remove the 4 bolts.

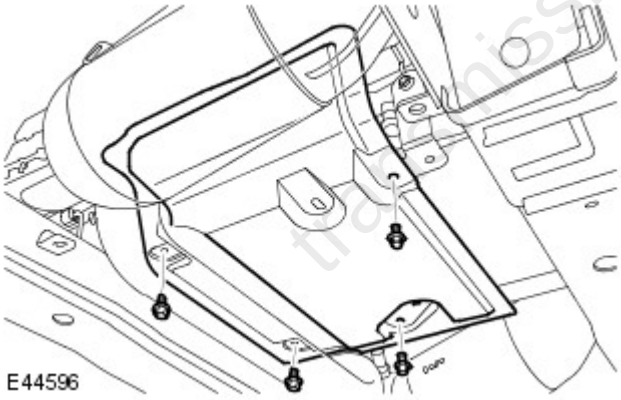

5. Adjust the selector cable.

- Using an additional wrench, restrain the clamping bush and loosen the locknut.
- Move the selector lever on the gearbox fully forward and release it. The lever will return to the 'P' position.
- Make sure the selector lever is in the 'P' position.
- Push the cable inner rearward then release it.
- Tighten the locknut to 14 Nm (10 lb.ft).

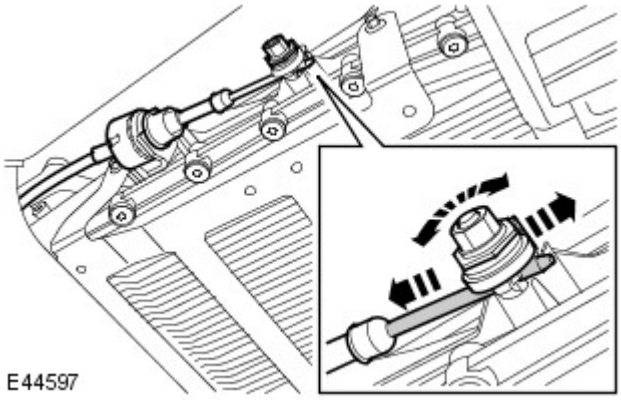

transmissionmanuals.com

6. WARNING: The hand brake and foot brake MUST BE applied.

Check for correct cable adjustment.

- Move the selector lever from 'P' position, check engagement in each position and return to 'P'.
- Check that the engine will start in 'P' and 'N' positions and that the engine start is inhibited when drive positions are selected.

7. If installed, install the transmission heat shield.

- Tighten the bolts to 10 Nm (7 lb.ft).

8. Install the transmission undershield.

- Tighten the bolts to 10 Nm (7 lb.ft).

transmissionmanuals.com

Published: 11-May-2011

Automatic Transmission / Transaxle External Controls - TDV6 2.7L Diesel - Selector Lever Assembly

Removal and Installation

Removal

1. WARNING: Do not work on or under a vehicle supported only by a jack. Always support the vehicle on safety stands.

Raise and support the vehicle.

2. If installed, remove the transmission undershield.

- Remove the 6 bolts.

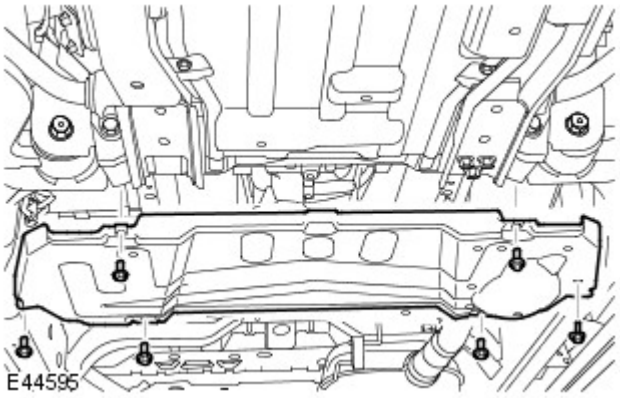

3. Remove the transmission heat shield.

- Remove the 4 bolts.

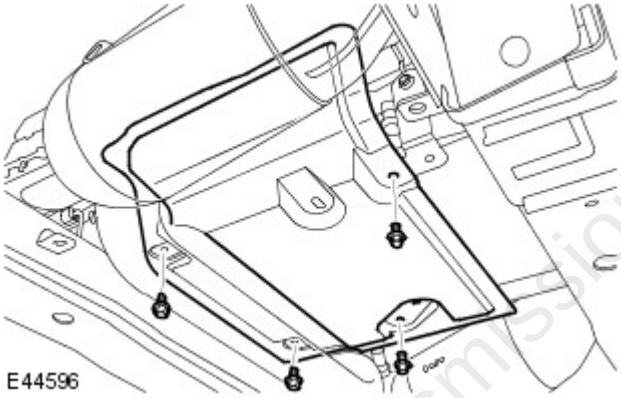

4. Release the selector cable.

- Using an additional wrench, restrain the clamping bush and loosen the locknut.
- Compress the latch and release the cable.

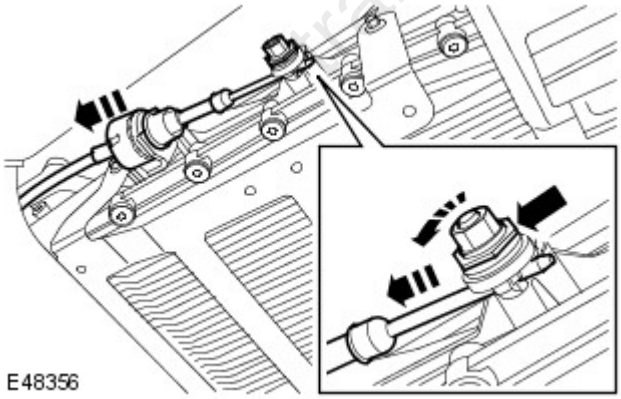

transmissionmanuals.com

5. Release the selector cable from its guide bracket.

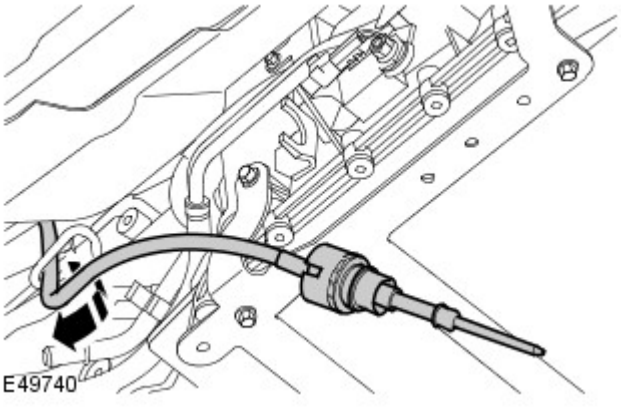

6. Remove the floor console upper trim panel.
7. Remove the transmission selector lever.
   - Remove the 3 nuts.
   - Disconnect the electrical connector.
   - Release the selector cable from the body.

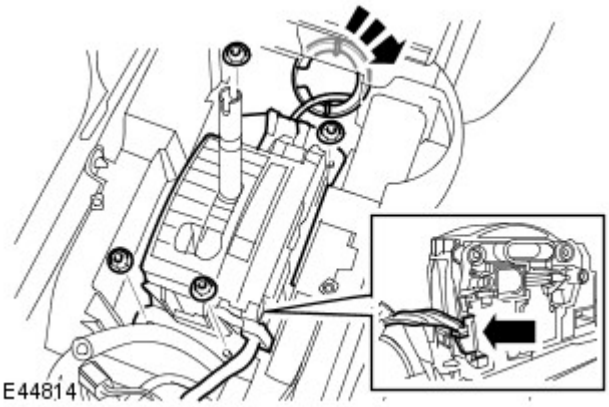

Installation

1. Install the transmission selector lever.
   - Secure the cable to the floor.
   - Connect the electrical connector.
   - Tighten the nuts to 8 Nm (6 lb.ft). Before VIN257100, discard old fixings.

2. NOTE: Do not tighten the locking nut at this stage.

   Connect the selector cable to the transmission.
   - Engage the inner cable with the lever clamping bush.
   - Connect the selector cable to its abutment bracket.

3. Position the selector cable to its guide bracket.
4. Install the floor console upper trim panel.
5. Adjust the selector cable.
6. Install the transmission heat shield.
   - Tighten the bolts to 10 Nm (8 lb.ft).
7. If installed, install the transmission undershield.
   - Tighten the bolts to 10 Nm (8 lb.ft).

transmissionmanuals.com

Published: 11-May-2011

Automatic Transmission / Transaxle External Controls - TDV6 2.7L Diesel - Selector Lever Knob

Removal and Installation

Removal

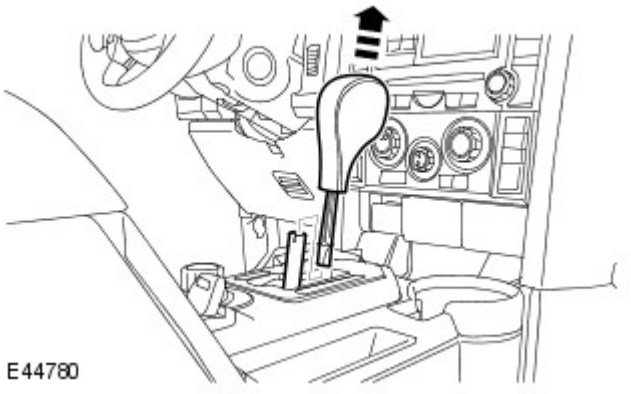

1. WARNING: The gear lever knob will be released suddenly, keep face clear during removal.

   Remove the selector lever knob.

   - Pull the knob upwards.

Installation

1. CAUTION: Only fit the selector knob when the selector lever is in the 'P' position.

   Install the selector lever knob.

   - Engage the locating tang of the knob with the slot in the selector lever.
   - Push the knob fully onto the selector lever.

transmissionmanuals.com

Published: 11-May-2011

Automatic Transmission / Transaxle External Controls - TDV6 2.7L Diesel - Selector Lever Cable

Removal and Installation

Removal

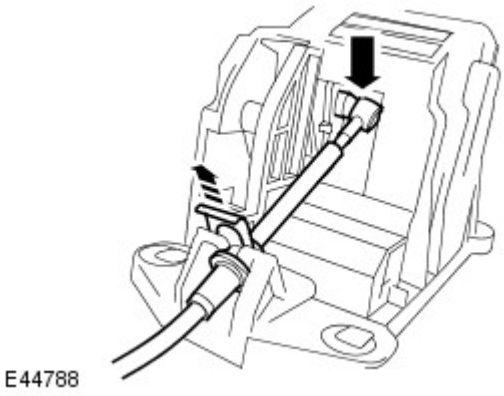
E44788

1. WARNING: Do not work on or under a vehicle supported only by a jack. Always support the vehicle on safety stands.

   Raise and support the vehicle.

2. Remove the transmission selector lever.
   For additional information, refer to: Shift Selector (307-01, In-vehicle Repair).

3. Remove the selector lever cable.
   - Remove the clip.
   - Release the cable.

Installation

1. Install the selector lever cable.
   - Clean the components.
   - Secure the cable.
   - Install the clip.

2. Install the transmission selector lever.
   For additional information, refer to: Shift Selector (307-01, In-vehicle Repair).

transmissionmanuals.com

Published: 11-May-2011

Automatic Transmission / Transaxle External Controls - TDV6 2.7L Diesel - Selector Lever Gate Finish Panel

Removal and Installation

Removal

1. Remove the selector lever knob.
   For additional information, refer to: Selector Lever Knob (307-05A Automatic Transmission/Transaxle External Controls - TDV6 2.7L Diesel, Removal and Installation).
2. Remove the selector lever gate finish panel.
   - Carefully release the gate finish panel.
   - Disconnect the 2 electrical connectors.

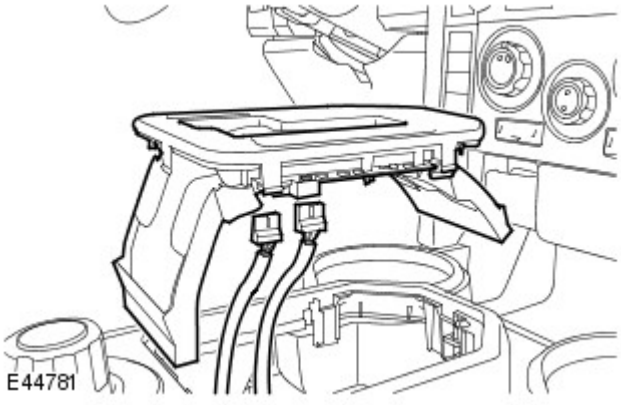

Installation

1. Install the selector lever gate finish panel.
   - Connect the electrical connectors.
2. Install the selector lever knob.
   For additional information, refer to: Selector Lever Knob (307-05A Automatic Transmission/Transaxle External Controls - TDV6 2.7L Diesel, Removal and Installation).

transmissionmanuals.com